DESIGN	2” to 24”
	150 PSI COLD WORKING PRESSURE

DRAWING NO.
AL 110140

PARTS LIST

ITEM	DESCRIPTION	MATERIAL
1	Body	Carbon Steel (ASTM A 216, Grade WCB)
2	Inner Hex Head Screws (4)	Alloy Steel (ASTM A 193, Grade B7)
3	Gate	Stainless Steel (ASTM A 276, Grade F-304)
4	Valve Seats (2)	Carbon Steel (ASTM A 216, Grade WCB)
4a	Valve Seat Surface* (2)	Carbon Steel (ASTM A 216, Grade WCB)
5	Packing	PTFE
6,12,15	Nut	Alloy Steel (ASTM A 194, Grade 2H)
7	Stud	Alloy Steel (ASTM A 193, Grade B7)
8	Clamp Plate	Carbon Steel (ASTM A 351, Grade WCB)
9	Stem	Stainless Steel (ASTM A 276, Grade F-410)
10	Bevel Gear Operator	
11	Spring Washer	Carbon Steel (AISI 1065)
13	Post (Chrome Plated)	Carbon Steel (AISI 1035)
14	Bolt	Alloy Steel (ASTM A 193, Grade B7)
16	Straight Pin	Carbon Steel (AISI 1035)
17	Cotter Pin	Stainless Steel (ASTM A 276, Grade F-304)
18	Packing Gland	Carbon Steel (ASTM A 351, Grade WCB)
19	O-Rings (2)	(See Below)

*O-Ring Options: Buna-N, Viton, EPDM, and PTFE.

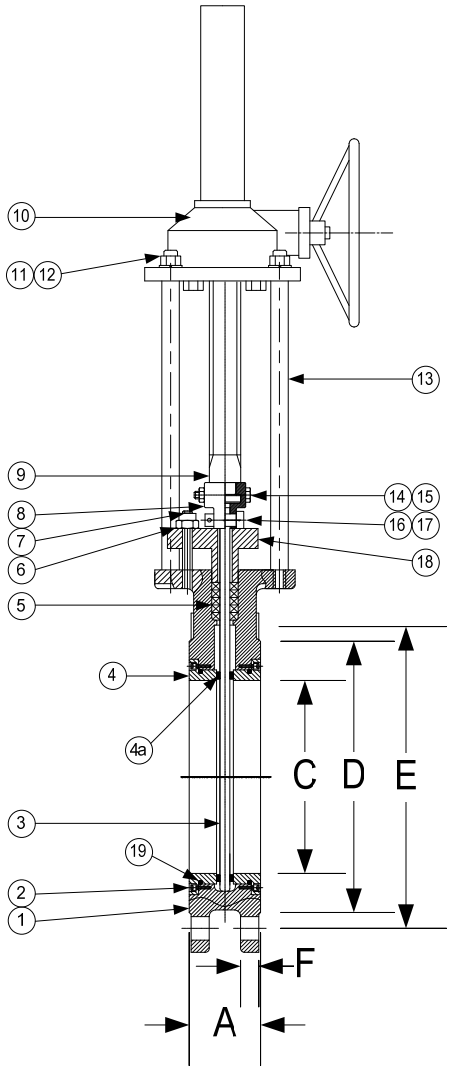

PRODUCT NUMBER	SIZE	DIMENSIONS (in)					WEIGHT (lbs)
		A	C	D	E	F	
22KGV-CS-MBB	2	1.88	1.81	3.62	4.75	0.50	20
21/22KGV-CS-MBB	2-1/2	2.00	2.36	4.13	5.50	0.50	23
32KGV-CS-MBB	3	2.00	2.76	5.00	6.00	0.50	27
42KGV-CS-MBB	4	2.00	3.78	6.20	7.50	0.50	35
52KGV-CS-MBB	5	2.25	4.72	7.28	8.50	0.63	47
62KGV-CS-MBB	6	2.25	5.71	8.50	9.50	0.63	57
82KGV-CS-MBB	8	2.75	7.64	10.63	11.75	0.63	86
102KGV-CS-MBB	10	2.75	9.65	12.76	14.25	0.75	141
122KGV-CS-MBB	12	3.00	11.81	15.00	17.00	0.75	187
142KGV-CS-MBB	14	3.00	12.99	16.26	18.75	0.81	265
162KGV-CS-MBB	16	3.50	14.96	18.50	21.25	0.88	381
182KGV-CS-MBB	18	3.50	16.54	21.00	22.75	0.94	474
202KGV-CS-MBB	20	4.50	18.50	23.00	25.00	1.00	637
242KGV-CS-MBB	24	4.50	22.44	27.26	29.50	1.00	884

KECKLEY

3400 CLEVELAND SKOKIE ILLINOIS

DRAWING NO.
AL 110140

DIMENSIONAL ASSEMBLY

PART NO.
2KGV-CS-MBB

150# Flg. Style KGV Bevel Gear Operated

SCALE: NTS

Bi-Directional Knife Gate Valve

DATE: 05/13/2013

MAT’L: Cast Carbon Steel

REQ. ---

DR. BY DSF